I2C SPI uW

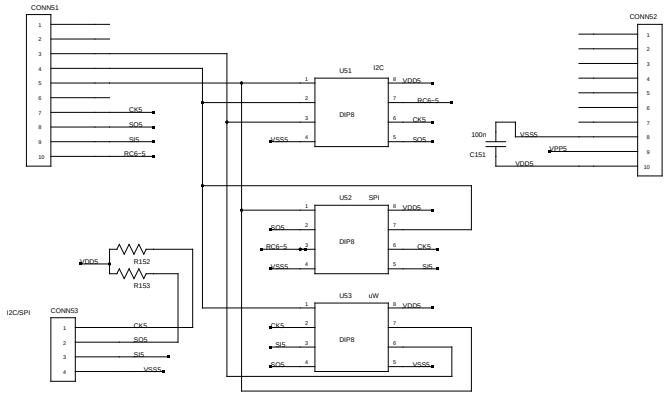

PIC-ICSP

I2C SPI uW

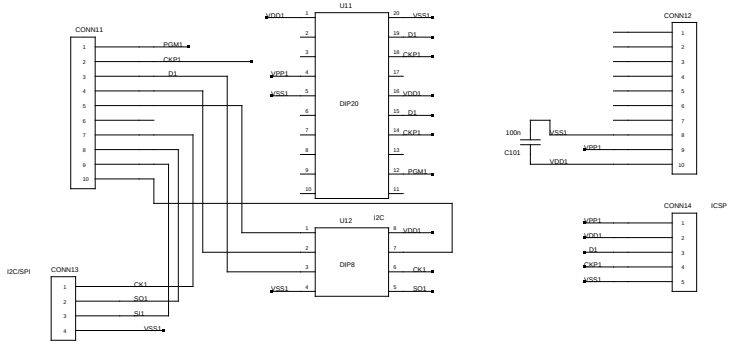

PIC-ICSP

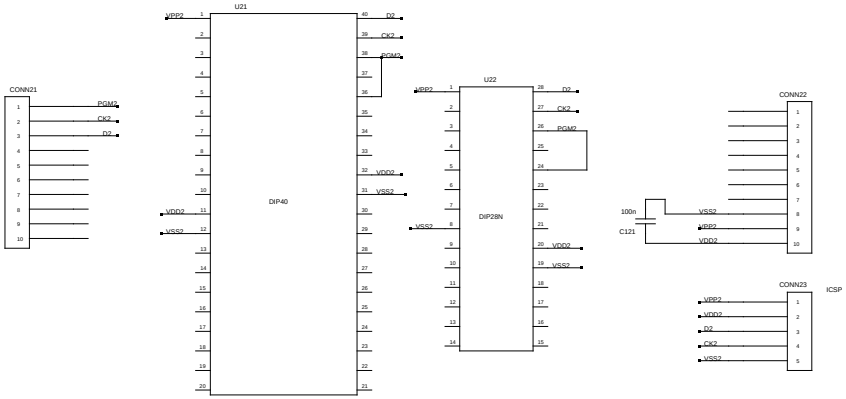
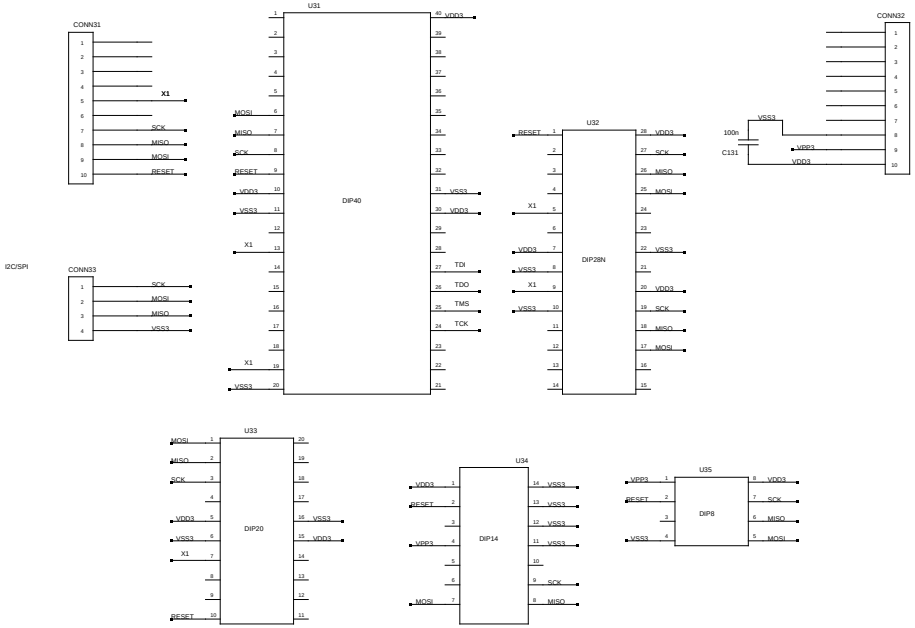
ATMEL-I2C